IMPROVED THERMAL INSULATION IN WINDOWS BY LAMINAR AIRFLOWS

P.O. Tjelflaat, Ph.D. **B. Bergesen**

ABSTRACT

Laminar airflows are applied in windows in order to improve the thermal insulation property. Most of the heat that is lost through conventional windows is in the supply airflow windows taken up by the airflow and brought back into the building. The supply airflow rate is intended to comply with the airflow rate required for ventilation purpose in the building.

A double-pane and a triple-pane supply airflow window are considered. On the basis of theoretical calculations and experiments it is shown that the double-pane airflow window will reach total U-values down to .5 $W/m^2 \cdot K$ (0.09 $Btu/ft^2 \cdot hr \cdot F$).

Exact U-values for the triple-pane airflow window are not given, but temperature measurements indicate a lower U-value for this window. Further investigations will be necessary to give the full answer.

INTRODUCTION

Energy-conscious building design has, through the last decade, resulted in decreased heat loss from buildings. The energy conservation benefits are mainly achieved by reduction of air leakages and improved thermal insulation in the building envelope, including the windows. In addition, heat losses have been reduced by heat recovery in the ventilation system.

Despite the progress in window performance, the thermal insulation of windows is poor compared to the remaining part of the building envelope. U-values for conventional windows are today approximately 10 times greater than for walls.

Heat is lost through windows by thermal radiation, conduction, and convection. The improvements in windows are, up to this time, mainly achieved by increasing the number of vertical transparent partitions and by using heat-reflecting coatings and low-conductivity fill gases.

The conventional windows used in Scandinavia today are usually sealed double-/or triple-pane constructions with a heat-reflecting coating on one pane.

Window improvements also have been made by applying airflows between window panes. Exhaust air windows have been used for some years now, but their contribution to heat conservation is minor or sometimes even negative when heat recovery is applied in the ventilation system.

Another kind of airflow window is the supply air window that may be applied in buildings with mechanical ventilation systems or natural ventilation. However, the mechanical ventilation system is prefered for two reasons; the airflow rates are easier to control and the enthalpy in the exhaust air may be recovered by a heat pump for hot water heating.

In this paper, the development of a supply air window is presented.

P.O. Tjelflaat, Associate Professor, Division of HVAC, The University of Trondheim, Norway, and B. Bergesen, Researcher, SINTEF, Trondheim, Norway.

A DOUBLE-PANE SUPPLY AIR WINDOW

A double-pane window is considered in the original proposal for this laminar supply air window construction. At the top of the airspace between two panes, air at outdoor temperature is admitted downward along the cold pane and air at indoor temperature along the hot pane (Figure 1). When the flow between the panes is laminar, the temperature discontinuity will be smeared out by molecular diffusion only. A thermal boundary layer will develop downstream near the centerline of the airspace. But as long as the thermal boundary layer does not interact with the cold pane, i.e., as long as $\delta_T < w/2$ (Figure 2), practically no heat transfer will take place from the warm airflow to the external cold environment.

In order to achieve the intended thermal insulation property, it is crucial that the flow between the panes is laminar and free from disturbances. The inflow part of the window, therefore, has to be carefully designed.

Furthermore, the amount of cold air that is admitted into the airspace, heated, and supplied to the inside of the building, corresponds to the airflow rate that is required for ventilation purpose.

Finite Difference Solution

In a numerical investigation of the problem described above (Tjelflaat and Ytrehus 1981; Tjelflaat 1984), the thermal insulation property of the double-pane window has been examined.

The flow and heat transfer problem between the panes was considered as developing laminar flow through a two-dimensional channel with straight vertical walls having length H and width w (Figure 2). One of the channel walls (emulating the inner pane) is kept at the temperature T_0, whereas the other wall is cooled to a lower temperature, T_1. The inlet flow at the top of the channel has a uniform velocity profile and a discontinuity in the temperature distribution at the half-width of the channel.

The physical problem is described by the steady state Navier-Stokes equations for a viscous, heat conducting incompressible fluid with constant properties and with buoyancy effects included.

The governing equations were solved by use of a finite difference method. Numerical solutions of the finite difference equations have been presented by Tjelflaat and Ytrehus (1981) and Tjelflaat (1984). The numerical solutions were achieved at Reynolds numbers, $Re = u_m w/\nu$, where u_m is the mean velocity in the channel and ν is the kinematic viscosity, up to 1000 in forced convection.

Computational Results for Heat Transfer

Some of the computational results from the finite difference solution are given in Figure 3. The local nondimensional heat transfer, the Nusselt number:

$$Nu_x = \frac{q_w\, w}{k(T_0 - T_1)} \tag{1}$$

is shown as a function of the normalized coordinate along the channel $x^+ = x/w \cdot Re \cdot Pr$. $q_w = q_w(x)$ is the local heat flux at the colder wall, k is the thermal conductivity coefficient, and $Pr = \nu/a$ is the Prandtl number where a is the thermal diffusivity. Figure 3 shows that the local heat transfer increases with increasing distance x along the channel and decreases with increasing Reynolds number, Re, and increasing channel width, w.

High Grashof numbers

$$Gr = \frac{g\beta(T_0 - T_1)w^3}{\nu^2} \tag{2}$$

where $\beta \approx 1/T_0$ are seen to give high heat fluxes at the colder wall; The combined free and forced convection cases are less favorable than the pure forced convection case. The buoyancy forces cause the velocity profile in x-direction to be strongly deflected as not fluid is convected lateral toward the colder wall. However, the deflection of the velocity profile is small if $Gr/Re^2 << 1$. The thermal insulation property is shown to be poor in cases with high Grashof numbers.

The results for heat transfer are easily compared to heat conduction in still air where $Nu_x = 1.0$. This is also the asymptotic value for all the heat transfer cases as x^+ increases towards infinity.

The overall Nusselt number is given as

$$Nu_m = \frac{1}{H}\int_0^H Nu_x dx \tag{3}$$

The heat transfered by conduction and convection, U_c, to the colder wall of a certain height H, the fact is directly related to Nu_m.

Due to the fact that the temperatures at the two walls are constant, it is easy to calculate the radiative part of the heat transfer coefficient, U_r. The total heat transfer is now represented by

$$U = U_c + U_r \tag{4}$$

<u>where</u>

$$U_c = Nu_m \frac{k}{w} \tag{5}$$

$$U_r = \frac{\sigma(T_0^4 - T_1^4)}{(1/\varepsilon_0 + 1/\varepsilon_1 - 1)(T_0 - T_1)} \tag{6}$$

σ is the Stefan-Boltzmann constant and ε_0 and ε_1 are the emissivities of the inner and outer pane, respectively. Two different heat mirror coatings are considered; gold coating with $\varepsilon = .04$ and tin-oxide coating with $\varepsilon = .15$. Window panes are considered to have $\varepsilon = .85$.

The results for the total specific heat loss, U, is presented by Tjelflaat and Moe (1983). The calculations are based on an airflow window with Re = 1000 and $Gr/Re^2 = .24$. The spacing between the panes is w = 17.5 mm. The calculations are theoretical and based on fixed temperatures on the panes. For that reason, they are not comparable to measured U- values for windows that are based on indoor and outdoor air temperatures.

However, theoretical U-values have been calculated for some sealed double-pane windows, also with heavy-gas filling, for the sake of comparison. The air in the sealed space between the panes is assumed stagnant.

The results are given in Table 1 showing the heat loss for laminar airflow windows of different heights and with different coatings. The airflow window of height 500 mm and with gold coating seems very favorable compared to the sealed double-pane window. The total U-value for this window is 0.42 $W/m^2 \cdot K$ (.07 $Btu/ft^2 \cdot hr \cdot F$). The U-values calculated are somewhat higher than for real cases as inside and outside film heat transfer cofficients are not taken into account.

Flow Stability

A turbulent or a strongly disturbed laminar flow between the two panes ruins the intended thermal insulation property.

High Grashof numbers will not only, as mentioned above, lead to a higher heat transfer in the laminar mode of flow but will also give a critical Reynolds number for transition to turbulent flow that is lower than for the pure forced convection case. Beavers et al. (1970) give a critical Reynolds number equal to 2200 for forced convection in a parallel-plate channel. Experimental data for combined free and forced convection in vertical tubes are presented by Metais and Eckert (1964). The results show a considerable drop in transition

Reynolds number for high Grashof numbers. Similar results must be expected for the flow in the present case.

According to the simple theorems developed for inviscid flow by Rayleigh and Tollmien (see Drazin and Reid [1981]) the appearance of an inflection point in the velocity profile indicates hydrodynamical instability in the flow. For the fully developed channel flow between walls at different temperatures, it is easy to show analytically that an inflection point will appear for Gr/Re >24.

Laboratory Tests

In order to determine the dependence of transition on Reynolds and Grashof number and to test the predicted performance of the present window system, laboratory tests were conducted.

The main part of the experimental setup is shown in Figure 4. It consists of two ducts for supply of cold air and air at indoor temperature. The two flows come into contact at the top of a double-pane window consisting of a single pane at the inner side and an aluminum plate at the outer side. Aluminum is chosen in order to achieve a nearly constant temperature in the "outer pane." The aluminum plate is cooled at the outside by cold air-flowing through an insulated box as shown in the figure. The window has height H = 1250 mm while the distance across the airflow is w = 40 mm. The flow velocity at the outlet of the airspace at the lower part of the window was found to be constant along the window. The velocity deviations was measured to be within 5 % at distances above 50 mm from the window frame.

Smoke experiments were carried out in order to test the applicability of the inflow part of the window. Smoke was admitted through tubes into the inflow part.

It was found, despite a good entrance design, that the trailing edge that divides the cold and the hot inlet flows is an origin of disturbances. In our first test series, when the two supply flows and both panes were kept at the same temperature, it was discovered that vortices were separated from the trailing edge for Re ≈ 1000 and above this value.

Discussion

The laboratory tests have shown that the flow between the panes contains disturbances above a certain Reynolds number. Despite the fact that the flow cannot be characteristized as turbulent, as the Reynolds number is well below the critical value Re_{cr}=2200, the intended insulation property is partly ruined by the vortices separated from the trailing edge. The vortices are convected downstream between the panes, probably leading to increased heat transfer compared to the undisturbed flow.

Even at Reynolds numbers below 1000, disturbances must be expected; Gr/Re > 24 will probably lead to instabilities and transition to turbulent flow. As the characteristic temperature difference in the Grashof number is the difference between the temperature of the inner and the outer pane, the temperature difference will often be high and the magnitude of Gr/Re will exceed the critical value.

The hot and the cold flows are brought together at the top of the double-pane window. The computational results for heat transfer show an undesirable effect, as heat loss at the cold pane is considerably increased at high Grashof numbers compared to pure forced convection. For this reason, high Grashof numbers must be avoided.

The control of the flow rate of the cold and the hot airflow is probably complicated and expensive. The cold airflow comes from outside and the hot airflow comes from inside the building. Due to pressure differences between inside and outside caused by wind, natural convection effects, and ventilation equipment, varying airflow rates may occur in the two airflows and may cause instabilities and disturbances in the flow and increased heat loss at the cold pane.

Even though we have mentioned some problems above, the theoretical results for U-values for the double-pane airflow window compared to ordinary windows seem promising for Reynolds numbers below 1000.

A TRIPLE-PANE SUPPLY AIR WINDOW

The experiences gained with the double-pane supply air window have been applied for a new construction; a triple-pane supply air window. Only cold air from outside is now supplied to the window in order to avoid some of the airflow control problems and in order to avoid the trailing edge that is an origin of disturbances in the flow.

The inner single pane is replaced by a sealed double-pane glazing with heat mirror coating on one of the panes. In this way the temperature differences across the airflow has been reduced. Reduced temperature differences are advantageous in two ways; the Grashof number and the radiative heat transfer are reduced.

The aluminum plate, painted matt black, is also now used as the outer pane of the window construction.

Numerical calculations of heat transfer, as performed for the double-pane supply air window, are not that simple for the triple-pane window construction. The problem now includes the radiative heat transfer to be solved simultaneously with the conductive and convective heat transfer. So far, numerical calculations of heat transfer have not been performed for this case.

However, some laboratory tests will be presented.

The Test Rig and the Measuring Equipment

The test rig applied for the double-pane supply air window (Figure 3) was reconstructed as shown in Figure 5. The cold airflow is supplied at the top of the window and admitted into the space between the aluminium plate and the double glazing. The window construction has height H = 1250 mm and width B = 1250 mm. The distance across the airflow is now w = 20 mm. The sealed double glazing has pane thickness equal to 4 mm and an airspace width equal to 12 mm between the panes. It has a heat reflecting coating ε = .15 on the inner pane (Figure 6).

The airflow is visualized by a supply of smoke.

The double-pane glazing is equipped on both sides with thermocouples for temperature measurements (Figure 7).

A hot wire anemometer was applied to measure turbulence intensities at the flow outlet, at the lower part of the window.

Laboratory Tests

The main aims of the tests are:

- to test the inflow part of the window for disturbances in the flow
- to find limiting values for the influence of Grashof and Reynolds numbers on transition to turbulence
- to estimate the heat loss through the cold pane based on the temperature measurements.

The total U-value for the window construction is not easily found. The reason is that the heating of the supply airflow is small giving only a few degrees K temperature increase. In addition, the outlet flow at the lower end of the window is nonisothermal, which involves mixing of the flow in a thermal insulated box before the mean temperature can be measured. This is not done in the present laboratory tests.

Tests for Disturbances in the Inlet Flow. In the case of isothermal conditions, smoke is supplied into the inlet flow. For Reynolds numbers up to 1500, no disturbances caused by the entrance geometry were discovered. Measurements of turbulence intensities, taken at the outlet at the centerline of the channel are shown in Figure 8. The RMS-value is sketched as a function of the Reynolds number. The RMS-value is defined as:

$$RMS = \sqrt{\overline{u'^2}}/\bar{u}$$

where $\bar{u}$ is the time-mean value and u' is the fluctuating part of the velocity. Below Re = 1000 the turbulence intensities are seen to be of magnitude .5%. For Re > 1000 the turbulence intensities increase to about 2 % at Re = 1500.

Tests For Flow Stability in Aiding and Opposing Flow. In this case the inlet airflow is cooled and supplied at the top of the window. The aluminum plate emulating the outer pane is cooled to the same temperature as the inlet airflow.

A heat flow goes from the hot air inside the room, through the sealed double-pane window and into the vertical airflow. The heating of the airflow causes a buoyancy effect in the opposite direction of the flow, and the case is called "opposing flow."

Measurements of turbulence intensities in opposing flow (Figure 8) show a substansial increase in the RMS-value for Re > 500.

The window construction was then turned upside down in order to test the flow stability in this case of aiding flow. The inlet airflow is now supplied from below and flows upward in the window. The buoyancy effect is in the direction of the airflow.

The results for turbulence intensities are now improved compared to the case of opposing flow; the RMS-value is below 1 % for Re < 800.

Temperature Measurements. Temperatures at five points on the inner and outer pane of the sealed double glazing were measured (Figure 7). Typical measurement values are shown in Table 2. The supply air and the aluminum plate are cooled to 0^0C (32 F) while the temperature of the room air is 22.1^0C (78 F) The Reynolds number is Re = 1000 giving a flow mean velocity U_m = 0.75 m/s. The temperature on the inner pane is measured to be nearly constant at 15.6^0C (60 F) while the temperatures on the pane close to the airflow varies between 1.9^0C (35.4 F) near to the inlet to 3.3^0C (37.9 F) near to the outlet.

Calculated U-Values.

The measured values for the temperatures are used to calculate the total U-value for the sealed double-pane glazing, which is the inner boundary for the airflow. The U-values are calculated as:

$$U = U_c + U_r \tag{7}$$

where

$$U_c = \frac{k}{w_d} \frac{T_o - T_1}{T_{in} - T_{out}} \tag{8}$$

w_d being the distance between the panes in the sealed double-pane glazing.

T_0 and T_1 are the temperatures of the inner and outer pane in the double glazing. T_{out} and T_{in} are the temperatures of the outside air and the air on the room side of the window construction.

The radiative part U is now given as

$$U_r = \frac{\sigma(T_o^4 - T_1^4)}{(1/\varepsilon_o + 1/\varepsilon_1 - 1)(T_{in} - T_{out})} \tag{9}$$

where ε_0 = .15, and ε_1 = .85. The results are shown in Figure 9. The heat transfer through the double glazing is seen to increase with increasing Reynolds number. High heat transfer will lead to low temperature on the intermediate pane in the window. Then the radiative heat transfer to the outer pane will be small. In this way, most of the heat transfer through the double-pane glazing will not be lost to the environment but will be convected to the airflow and brought back into the room as a preheating of the ventilation supply air.

The U-values calculated above are based on differences between inside- and outside air temperatures, and they can directly be compared to U-values measured for conventional windows.

Even if the heating of the airflow is not utilized, the U-value of the window construction is seen to compare to the U-value of a conventional sealed triple-pane window with heat-reflecting coating $\varepsilon = .15$ on one pane. The results for aiding flow in the supply air window are clearly more favorable.

The total U-value for the complete triple-pane supply air window, representing the net heat loss through the outer pane, is considerably lower than for the sealed double-pane glazing; probably of magnitude .3 $W/m^2 \cdot K$ (.05 $Btu/ft^2 \cdot hr \cdot F$).

CONTRIBUTION TO ENERGY CONSERVATION

Application of supply air windows may reduce the total heat loss from buildings.

A typical single-family house built in Scandinavia today has a mechanical ventilation system with heat recovery and windows with U-values 1,5 $W/m^2 \cdot K$ (.27 $Btu/ft^2 \cdot hr \cdot F$). The heat loss through the windows is approximately 20% of the total heat loss from the building on yearly basis. It is realistic to cover about half of the window area in a house with triple-pane supply air windows. With an estimated U-value equal to .3 $W/m^2 \cdot K$ (.05 $Btu/ft^2 \cdot hr \cdot F$) for these windows, the total heat loss from the building will be reduced with about 8%. This value is just a rough estimate for what energy savings will be like.

CONCLUSION

Theoretical calculations and experimental results for the thermal insulation property of two supply airflow windows have been presented.

The examination of the double-pane supply air window shows expected U-values to be down to about .5 $W/m^2 \cdot K$ (.09 $Btu/ft^2 \cdot hr \cdot F$) in the best cases. For Reynolds numbers above 1000, smoke experiments show disturbances in the flow, so these cases should be avoided.

The triple-pane supply air window is more favorable with respect to avoiding disturbances in the flow than the double-pane window is. Temperature measurements for the triple-pane window and calculated U-values for the inner double glazing indicate total U-values for the complete construction that are below the result for the double-pane airflow window.

Airflow Reynolds numbers in the range 500 - 1000 seem realistic. Re= 1000 gives supply airflow rate $Q \approx 50$ $m^3/hr \cdot m$ (pr. m window width). This is an airflow rate that is too high for many buildings if all windows are supply air windows, but lower Reynolds numbers and application for about half of the window area will give flow rates that complyes with the supply air demand in the building. Thus energy savings of magnitude 8% are realistic for small houses in Scandinavia.

In the future, further investigations will be necessary in order to establish optimum design criteria and further the development of the triple-pane supply air window.

REFERENCES

Beavers, G.S.; Sparrow, E.M.; and Magnusson, R.A. 1970. "Experiments on the breakdown of laminar flow in a parallel-plate channel". Int. J. Heat Mass Transfer vol. 13, pp. 809 - 815.

Tjelflaat, P.O.; and Ytrehus, T. 1981. "Combined free and forced convection in a vertical channel". 2nd Int. Conf. on Num. Meth. in Thermal Problems. Pineridge Press, Swansea.

Tjelflaat, P.O. 1984. "Combined free and forced convection in a vertical channel", Dr.ing.-disstertation. NTH, Trondheim.

Metais, B.; and Eckert, E.R.G. 1964. J. Heat Transfer, 86:295.

Drazin, P.G.; and Reid, W.H. 1981. Hydrodynamic stability. Cambridge Univ. Press.

Tjelflaat, P.O.; and Moe, E. 1983. "Improved insulation by laminar airflow between window panes". The 16th IIR Conf. Paris

TABLE 1

Theoretical Heat Loss for Double-Pane Window Constructions,
ε_1 = .85, T_0 = 293 K, T_1 = 263 K . Re = 1000 for Laminar Airflow Window

CONSTRUCTION	w [mm]	ε_o	U_r	U_c [W/K•m^2]	U	U_r	U_c [Btu/hr•ft^2• F]	U
Sealed, air	12.0	0.15	0.71	2.0	2.7	0.13	0.36	0.49
Sealed, air	12.0	0.04	0.19	2.0	2.2	0.03	0.36	0.40
Sealed, Ar - SF_6	12.0	0.15	0.71	1.1	1.8	0.13	0.20	0.33
Sealed, Ar - SF_6	12.0	0.04	0.19	1.1	1.3	0.03	0.20	0.23
Lam.air flow,H=1000 mm	17.5	0.15	0.71	0.58	1.3	0.13	0.10	0.23
Lam.air flow,H=1000 mm	17.5	0.04	0.19	0.58	0.77	0.03	0.10	0.13
Lam.air flow,H= 500 mm	17.5	0.15	0.71	0.23	0.94	0.13	0.04	0.17
Lam.air flow,H= 500 mm	17.5	0.04	0.19	0.23	0.42	0.03	0.04	0.07

TABLE 2

Temperatures Measured in the Triple-pane Supply Air Window
Re= 1000, w = 20 mm. Opposing flow

Distance from inlet [mm]	Outside air		Intermediate pane		Inner pane		Room air	
	^{0}C	F	^{0}C	F	^{0}C	F	^{0}C	F
400	0.0	32	1.9	35.4	15.4	59.7	22.1	71.8
600	0.0	32	2.7	36.9	15.6	60.1	22.1	71.8
800	0.0	32	2.9	37.2	15.6	60.1	22.1	71.8
1000	0.0	32	3.2	37.8	15.6	60.1	22.1	71.8
1100	0.0	32	3.3	37.9	15.6	60.1	22.1	71.8

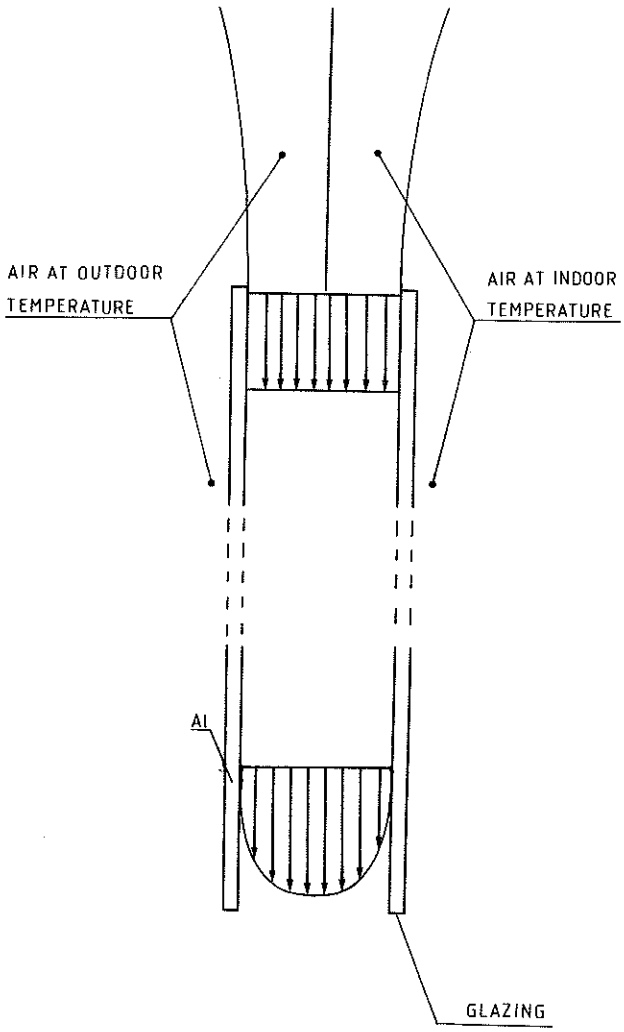

Figure 1. Double-pane airflow window. Cold airflow from outside and warm airflow from inside the building are supplied in the space between the panes

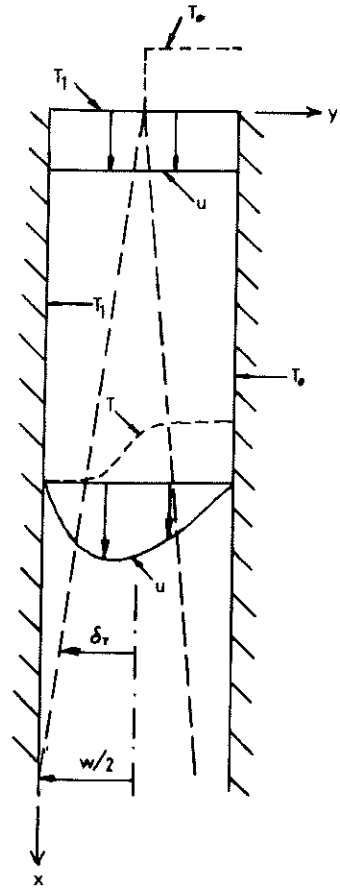

Figure 2. Double-pane airflow window. A thermal boundary layer is developing downward between the panes

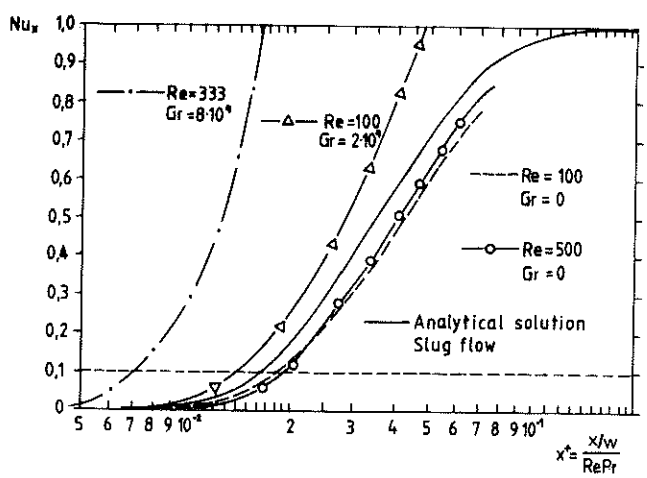

Figure 3. Double-pane airflow window. Calculated conductive and convective local heat transfer between the panes as a function of nondimensional distance from inlet

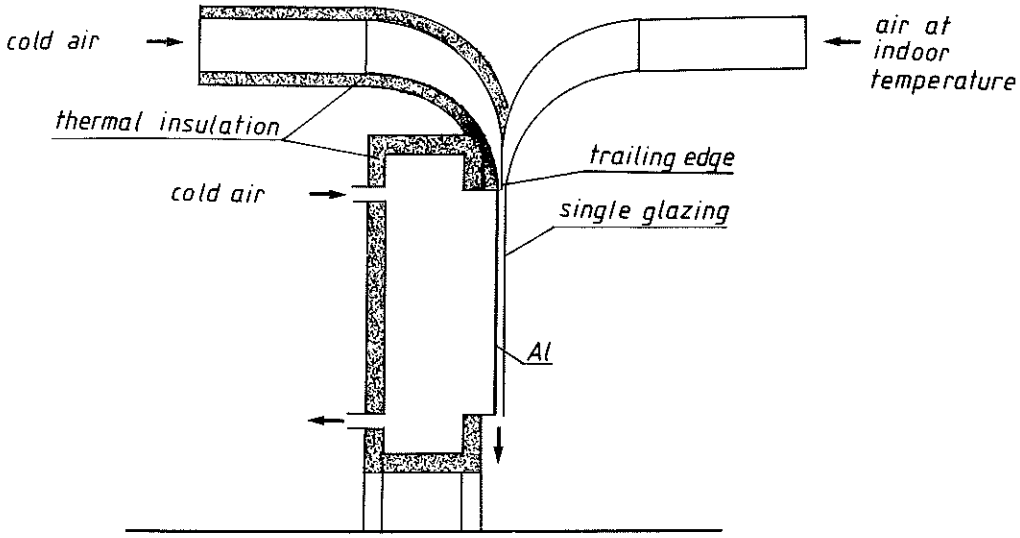

Figure 4. Experimental setup for double-pane airflow window. Window height is 1250 mm and distance between panes is 40 mm

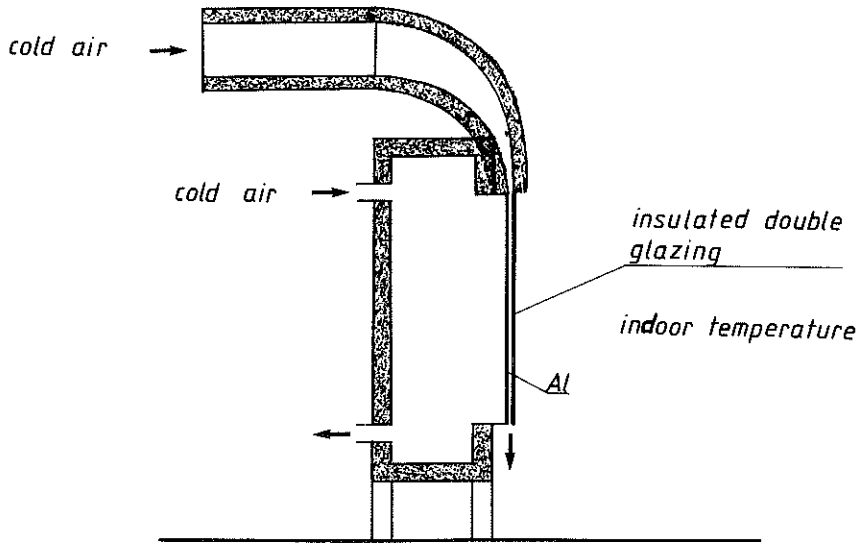

Figure 5. Experimental setup for triple-pane airflow window. Distance between panes (across the airflow) is 20 mm

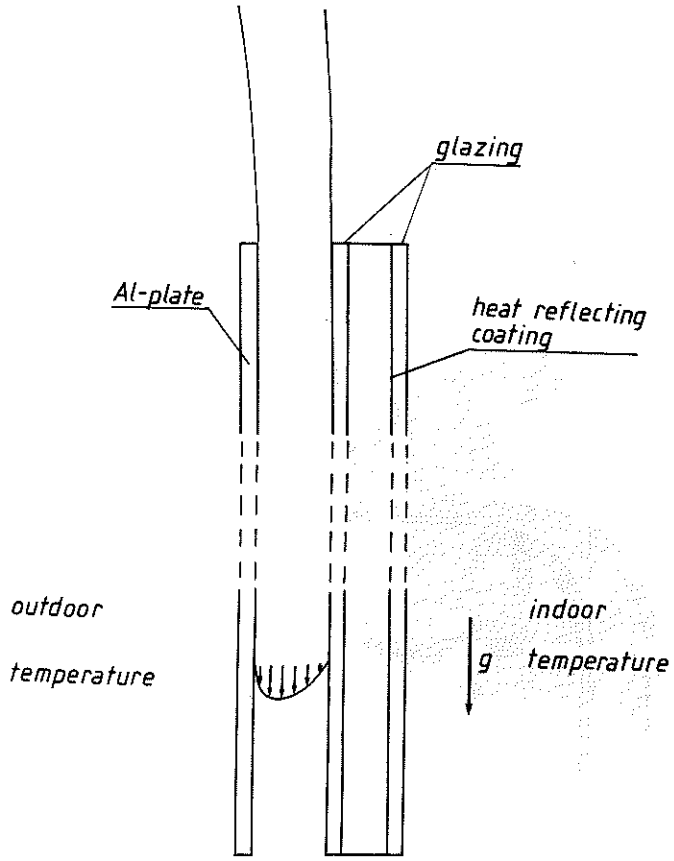

Figure 6. Details of experimental setup for triple-pane airflow window

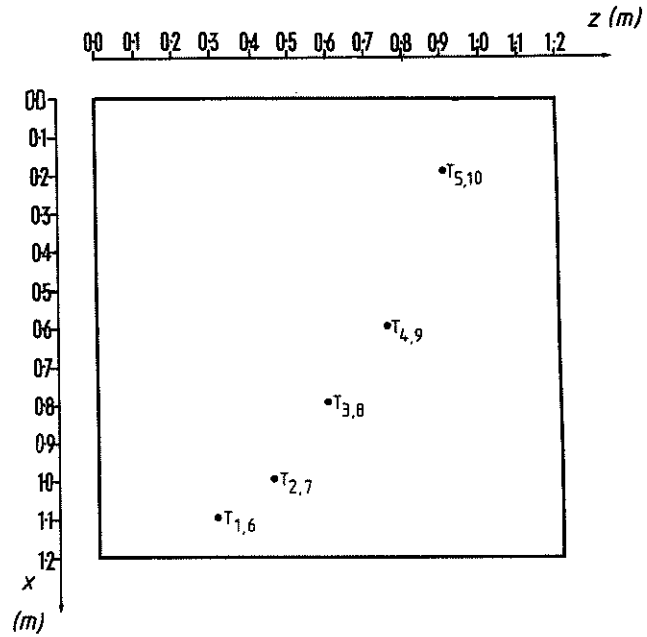

Figure 7. Positions for thermocouples. Five thermocouples on each side of double glazing in triple-pane airflow window

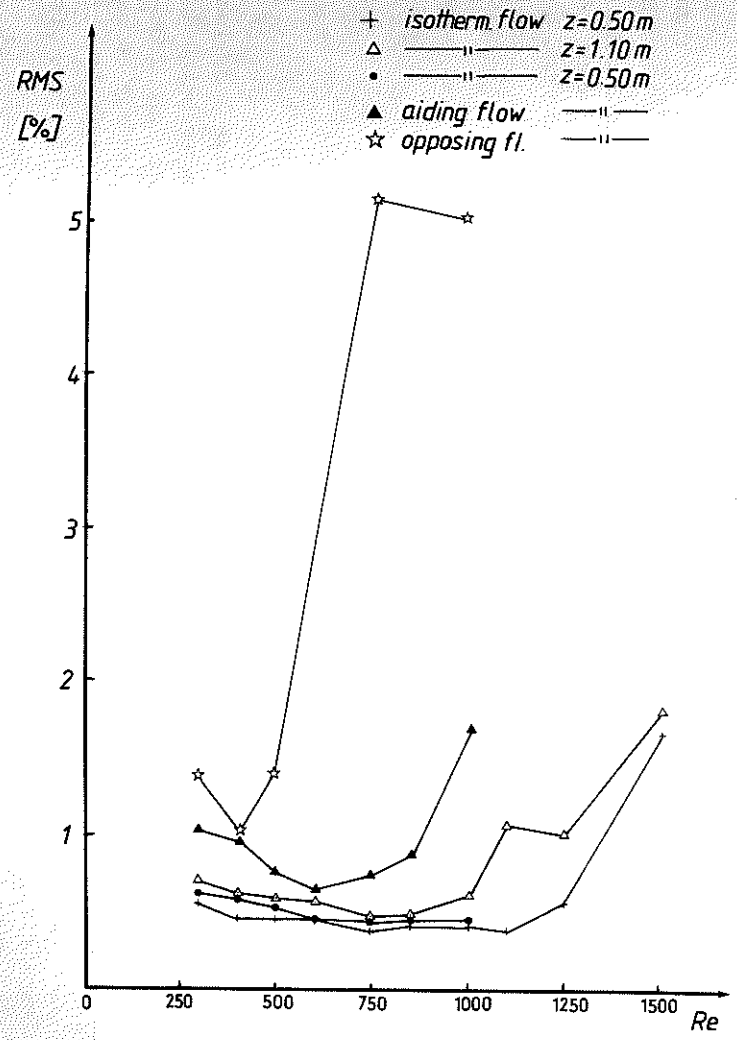

Figure 8. *Measured turbulence intensities in isothermal flow and in aiding and opposing flow for the triple-pane airflow window*

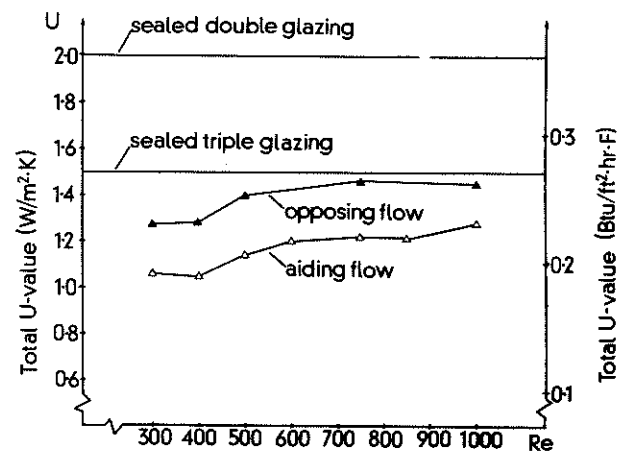

Figure 9. *Measured heat transfer through double glazing in triple-pane airflow window for opposing and aiding flow at different Reynolds numbers. Most of the heat transfer is taken up by the laminar airflow and brought back into the building. Measurements are compared to the heat transfer through conventional sealed double and triple glazings*